KMA 905
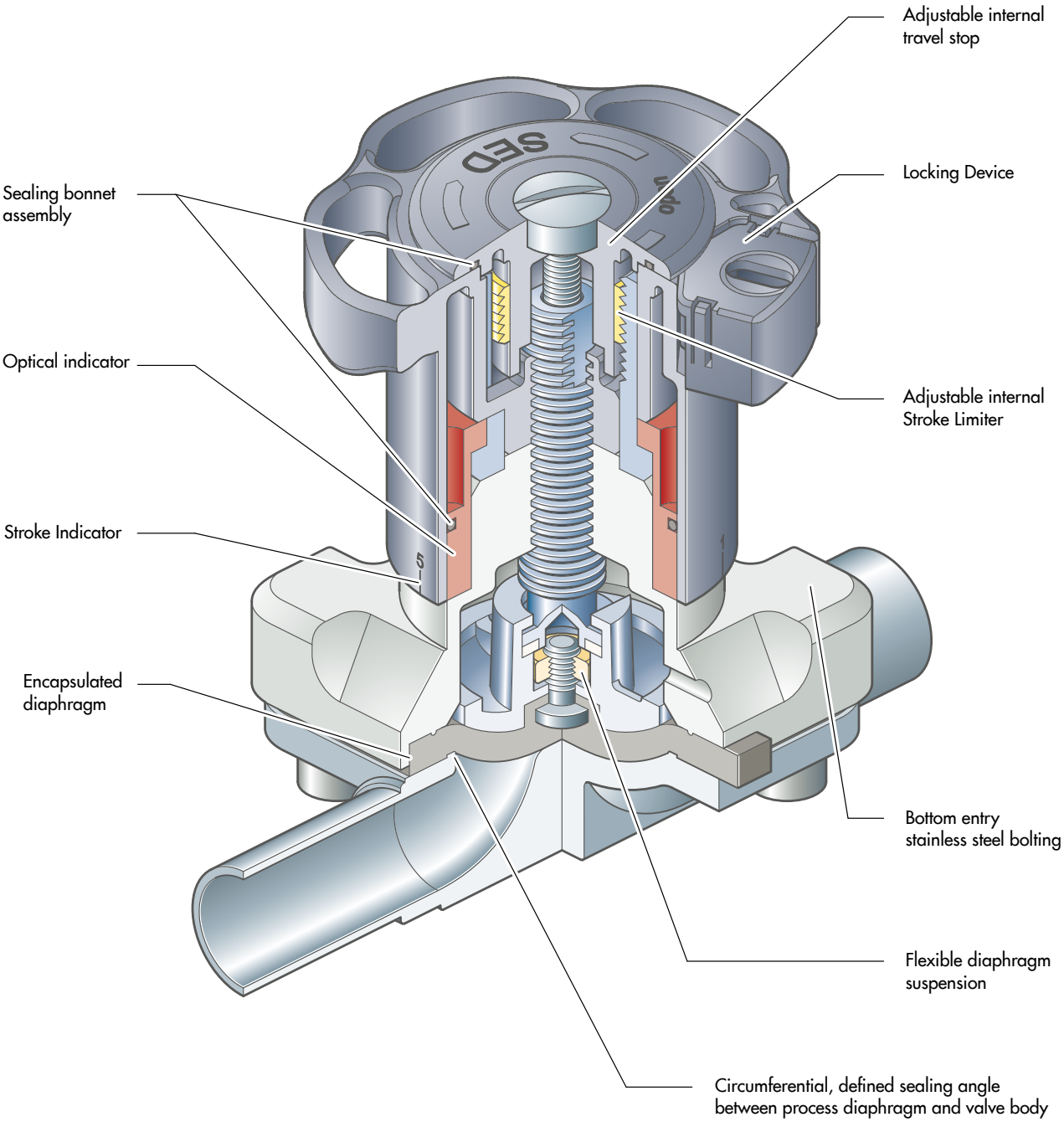
Manually operated Valve DN 15 - 50 mm (3/4" - 2 1/2")